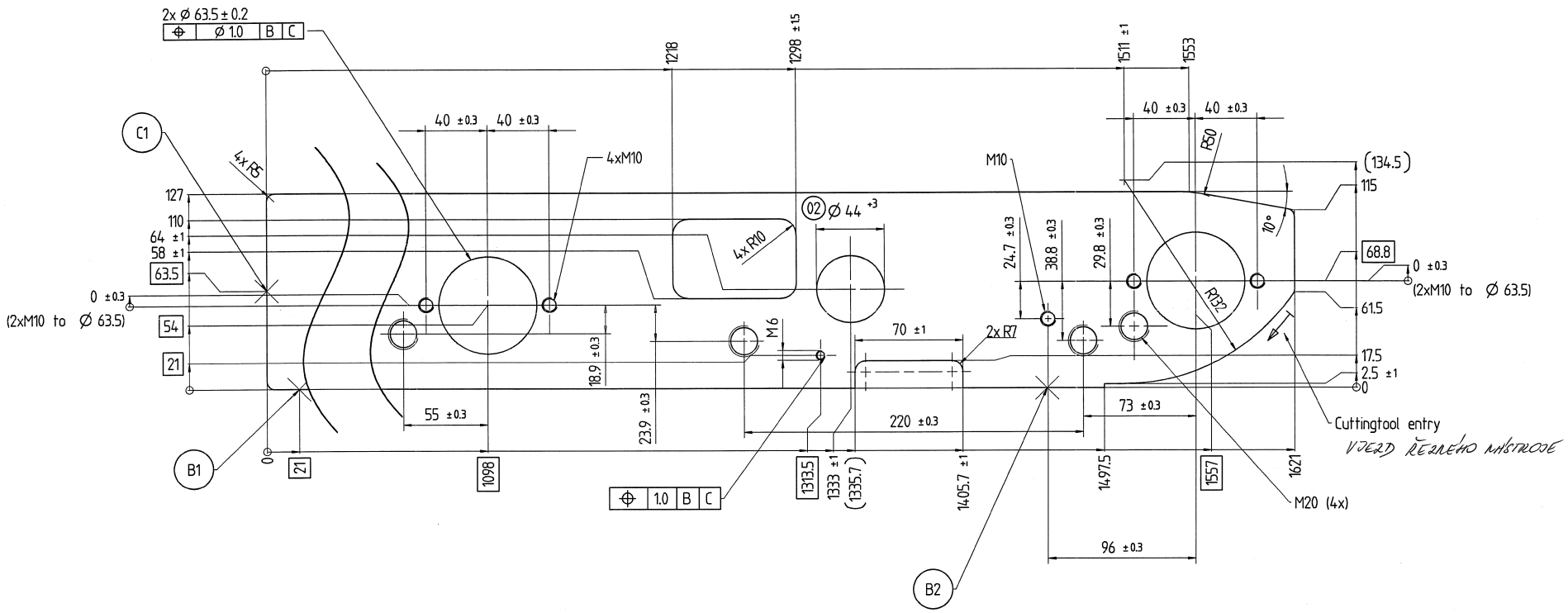

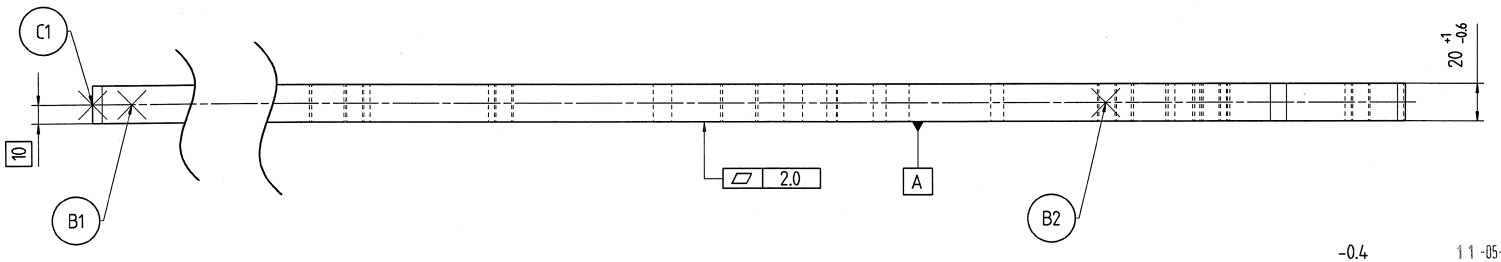

-0.4
-0.2

NEUKÓTOVANÝ DETAIL DLE 3D DAT

11-05-2015
ARCHIV
1

N2 15/00412

PŘEKLAD
dne: 17-04-2015
PROVEDL/A
K. Dušková

Non-dimensioned details according to 3D-Data

Autogenous flame cutting WN 10 572				
Thickness of the cut	≤ 20	> 20 ≤ 40	> 40 ≤ 60	> 60 ≤ 100
Rectangularity Inclination	1,0	1,4	1,8	2,2
Surface roughn. R_z	100	160	160	250
all possible cuttingtool entries marked by:				

Tolerances for section to DIN 6930 Part 2 accuracy grade g

outline length WN 10535		
outer	3469.2	mm
inner	1137.5	mm

Condition at time of delivery	
de-scaled (degree of purity SA 2 1/2 acc. ISO 8501-1)	X
without burrs acc. WN 11310	X
Permissible top-end rounding during flame cutting (also positive bead acc. WN 10572)	–
oil-free / free of grease	X
oiled	–
oiling permissible	–
Indicate the required condition at time of delivery with an X.	

First angle projection

General tolerance (GT) in mm
Size range: > 30 ≤ 30 | > 120 ≤ 120 | > 400 ≤ 400 | > 1000 ≤ 1000
GT coarse

L	1	2	2	3	4
◁	1	2	4	6	

Lengths (L) and angle (⊥ ∠) = ± GT

Tolerance Symbols ISO 1101
○ roundness = 1/2ø-Tol.
– ▱ straightness/flatness = GT
◎ ↗ concentricity/run out = GT
⌯ symmetry = GT
/ / parallelism = GT
⊕ position = GT

Languages: EN

Index	alteration	Change no	Fit	Toler.
02	hole 44+3 was 44+1	T69353		

Inspection dim.
Auxillary dim. ( )

	Date	Name
Drawn	24.03.2015	A.Schäflein
Checked	24.03.2015	M.Pieritz
Auth'd	24.03.2015	B.Cajan
M.check.	08.04.2015	C.Ulbrich

Material: S355J2+N
Blank no:
Title: plate LH R25
Weight: in Kg 29.6
Prod.
Scale 1:2
Drawing number: / / 11204012570
Sheet: 1 of: 1
Repl. 11204012521
Orig.
Released
3012653/D2D/001/02 A2
11204012570V02ENd001